Evaluation Report

"Kasselwood Metal Shingle"

Metal Roof Assembly

Manufacturer:

Kassel & Irons

(A division of Isaiah Industries)
8510 Industry Park Drive
Piqua, OH 45356
(800) 543-8938

for

Florida Product Approval

FL 11858.1 R4

Florida Building Code 7th Edition (2020)

Method: 1 - D
Category: Roofing
Sub - Category: Metal Roofing

Product: "Kasselwood Metal Shingle"
Material: Steel
Support: Wood Deck

Prepared by:
James L. Buckner, P.E., SECB
Florida Professional Engineer # 31242
Florida Evaluation ANE ID: 1916
Project Manager: Diana Galloway
Report No. 20-240-KWS-S9W-ER
(Revises 17-130-KWS-S9W-ER, FL11858 R3)
Date: 10 / 01 / 20

This item has been electronically signed and sealed by James L. Buckner, P.E., on this date using a Digital Signature. Printed copies of this document are not considered signed and sealed, and the signature must be verified on any electronic copies.

JAMES L. BUCKNER
LICENSE
No 31242
STATE OF FLORIDA
PROFESSIONAL ENGINEER

2020.10.02 18:48:16 -04'00'

Contents:

Manufacturer:	**Kassel & Irons** (A division of Isaiah Industries) 8510 Industry Park Drive Piqua, OH 45356 (800) 543-8938 https://www.kasselandirons.com/
Product Name:	**Kasselwood Metal Shingle**
Product Category:	Roofing
Product Sub-Category	Metal Roofing
Compliance Method:	State Product Approval Rule 61G20-3.005 (1) (d)
Product/System Description:	"Kasselwood Metal Shingle" Steel roof panel, with a wood shake or slate appearance, mechanically attached to Wood Deck.
Product Assembly as Evaluated:	Refer to Page 4 of this report for product assembly components/materials & standards: 1. Roof Panel 2. Fasteners 3. Underlayment
Support:	**Type:** Wood Deck (Design of support and its attachment to support framing is outside the scope of this evaluation.) **Description:** • 15/32"or greater plywood, • or Wood plank (min. specific gravity of 0.42)
Slope:	Minimum slope shall be In compliance with FBC Chapter 15 based on the type of roof covering, applicable code sections and in accordance with manufacturer's recommendations.
Performance:	Wind Uplift Resistance: • Design Uplift Pressure: (Refer to "Table A" attachment details herein) **METHOD 1: - 74.75 PSF** **METHOD 2: - 127.8 PSF** **METHOD 3: - 161 PSF**

Performance Standards:

The product described herein has demonstrated compliance with:

- UL 580-06 – *Test for Uplift Resistance of Roof Assemblies*
- UL 1897-12 – *Uplift test for roof covering systems*
- TAS 125-03 **–** *Standard Requirements for Metal Roofing Systems*

Standards Equivalency:

The UL 580-94 & UL 1897-98 standard version used to test the evaluated product assembly is equivalent with the prescribed standards in UL 580-06 & UL 1897-12 adopted by the Florida Building Code 7th Edition (2020).

Code Compliance:

The product(s) described herein have demonstrated compliance with the performance standards listed above as referenced in the Florida Building Code 7th Edition (2020).

Evaluation Report Scope:

This building envelope product is evaluated for compliance with the structural wind load requirements of the Florida Building Code, as related to the scope section to Florida Product Approval Rule 61G20-3.001.

Limitations and Conditions of Use:

- Scope of "Limitations and Conditions of Use" for this evaluation:
  This evaluation report for "Optional Statewide Approval" contains technical documentation, specifications and installation method(s) which include "Limitations and Conditions of Use" throughout the report in accordance with Rule 61G20-3.005. Per Rule 61G20-3.004, the Florida Building Commission is the authority to approve products under "Optional Statewide Approval".
- Option for application outside "Limitations and Conditions of Use"
  Rule 61G20-3.005(1)(e) allows engineering analysis for "project specific approval by the local authorities having jurisdiction in accordance with the alternate methods and materials authorized in the Code". Any modification of the product as evaluated in this report and approved by the Florida Building Commission is outside the scope of this evaluation and will be the responsibility of others.
- This report is a building code product evaluation per FLPE rule (FAC) 61G15-36 to comply with Florida product approval rule (FAC) 61G20-3. This evaluation report is part of the Florida Building Commission approval for the listed code related criteria. This report by James Buckner, P.E. and CBUCK Engineering is not a design certification of code compliance construction submittal documentation, per FBC section 107, for any individual structure, site specific or permit design.
- All metal components and fasteners shall be corrosion resistant in accordance with applicable sections of FBC, including but limited to Sections 1504.3.2, 1506.5, 1506.6 and 1507.4.4.
- Design of support system is outside the scope of this report.
- Fire Classification is outside the scope of Rule 61G20-3, and is therefore not included in this evaluation.
- This evaluation report does not evaluate the use of this product for use in the High Velocity Hurricane Zone code section. (Dade & Broward Counties)

Quality Assurance:

The manufacturer has demonstrated compliance of roof panel products in accordance with the Florida Building Code and Rule 61G20-3.0005 (3) for manufacturing under a quality assurance program audited by an approved quality assurance entity through **Farabaugh Testing & Engineering** (FBC Organization ID# QUA 7733).

Components & Materials: (by Manufacturer)

Roof Panel: **Kasselwood Metal Shingle**

Material:	Steel
Thickness:	29 gauge (min.)
Panel Width:	8-5/8" nominal (max.) Coverage
Panel Length:	40-5/8" nominal
Rib Height:	1/2" nominal
Yield Strength:	37 ksi min.
Corrosion Resistance:	Per FBC Section 1507.4.3

Anchor Strip:

Material:	Steel
Thickness:	29 gauge (min.)

Fasteners:

FASTENER 1:

Type:	Ring Shank Roofing Nails
Size:	1-1/4"
Corrosion Resistance:	Per FBC Section 1506.5
Standard:	Per ASTM F 1667

FASTENER 2:

Type:	Low Profile-Head Wood Screw
Size :	#10 x 1"
Corrosion Resistance:	Per FBC Section 1506.6 and 1507.4.4
	Per ANSI/ASME B18.6.1

FASTENER 3:

Type:	HWH A Hiform lag screw
Size :	#14 - 8 x 1"
Corrosion Resistance:	Per FBC Section 1506.6 and 1507.4.4

Underlayment:

Material and application shall be in compliance with FBC Section 1507.1.1 and in accordance with applicable code sections and manufacturer's recommendations.

Installation: **Installation Method:**

(Refer to **"TABLE A"** below and drawings at the end of this evaluation report.)

1. Install the Shingle to the deck starting at the eave.
2. Install Anchor Strip into Edge Flashing at the eave with fasteners spaced maximum 8" o.c. along the eave.
3. The first course of shingles shall fully engage the Anchor Strip.
4. Install the shingles to the deck with panel fasteners through the tab guide holes spaced 9.8" o.c., along the width of the shingle.
5. The male end of the shingle is then tucked in the female end of the previous shingle to form a lock. Interlocking ribs of the shingle must be fully engaged.
6. Install shingles in a staggered pattern.
7. For panel construction at the end of panels, refer to manufacturer's instructions and any site specific design.

TABLE "A" **ALLOWABLE LOADS**			
	METHOD 1:	**METHOD 2:**	**METHOD 3:**
Design Pressure:	**- 74.75 PSF**	**- 127.8 PSF**	**- 161 PSF**
Fastener Spacing Across Shingle width:	9.8"	9.8"	9.8"
Fastener:	Ring Shank Nail (Refer to Pg 4)	Low Profile Screw (Refer to Pg 4)	Lag Screw (Refer to Pg 4)
# Fasteners per Nail Tab:	1	2	1
Notes: • Allowable design pressure(s) for allowable stress design (ASD).			

Install the "Kasselwood Metal Shingle" roof panel assembly in compliance with the installation method listed in this report and applicable code sections of FBC 7th Edition (2020). The installation method described herein is in accordance with the scope of this evaluation report. Refer to manufacturer's installation instructions as a supplemental guide for attachment.

Referenced Data:

1. TAS 125-03 (Per UL 580 & UL 1897) Uplift Test
   By Hurricane Test Laboratory, LLC (FBC Organization #TST ID: 1527)
   Report #: 0360-0410-06, Report Date: 5/24/06
2. TAS 125-03 (Per UL 580 & UL 1897) Uplift Test
   By Hurricane Test Laboratory, LLC (FBC Organization #TST ID: 1527)
   Report #: 0360-0812-04, Report Date: 3/08/05
3. Equivalency of Test Standard Certification
   By James L. Buckner, P.E. @ CBUCK Engineering
   (FBC Organization # ANE 1916)
4. Quality Assurance
   By Farabaugh Testing & Engineering (FBC Organization ID# QUA 7733)
5. Certification of Independence
   By James L. Buckner, P.E. @ CBUCK Engineering
   (FBC Organization # ANE 1916)

Installation Method

Kassel & Irons
"Kasselwood Metal Shingle" (29 gauge Steel) Roof Panel attached to Wood Deck

Drawings

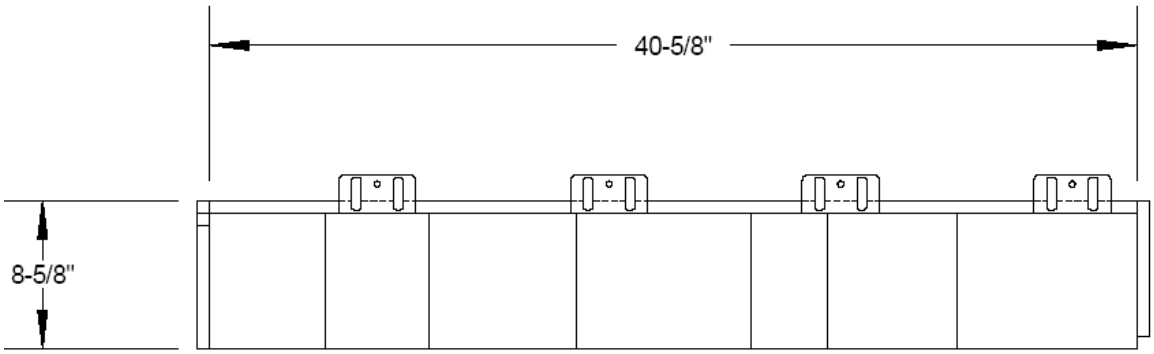

Typical Panel Profile

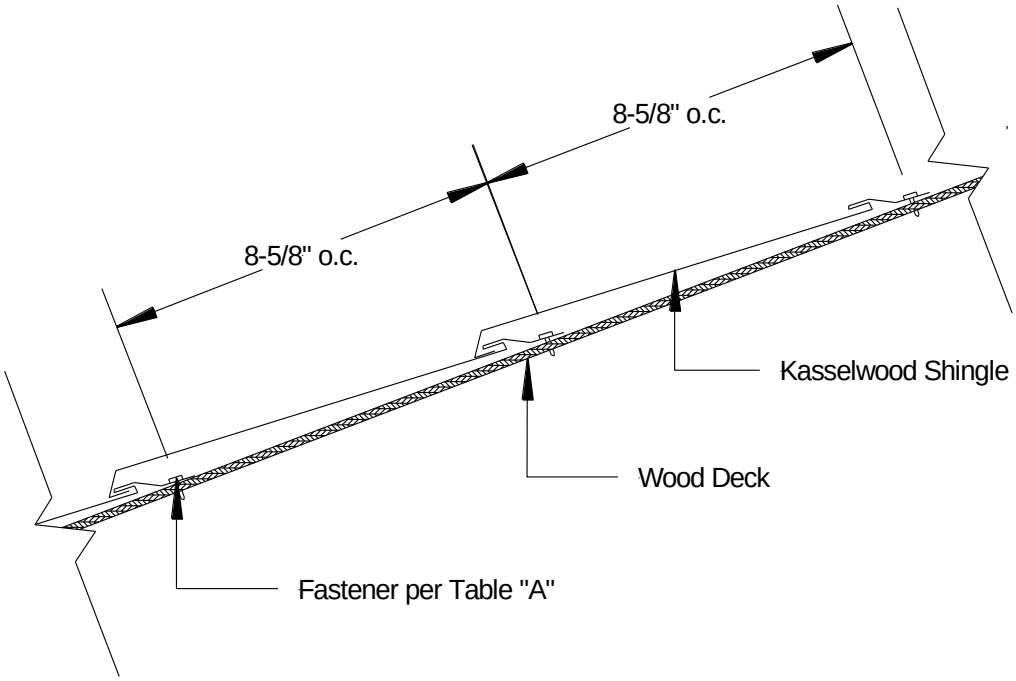

Assembly Profile Section View

Installation Method

Kassel & Irons

"Kasselwood Metal Shingle" (29 gauge Steel) Roof Panel attached to Wood Deck

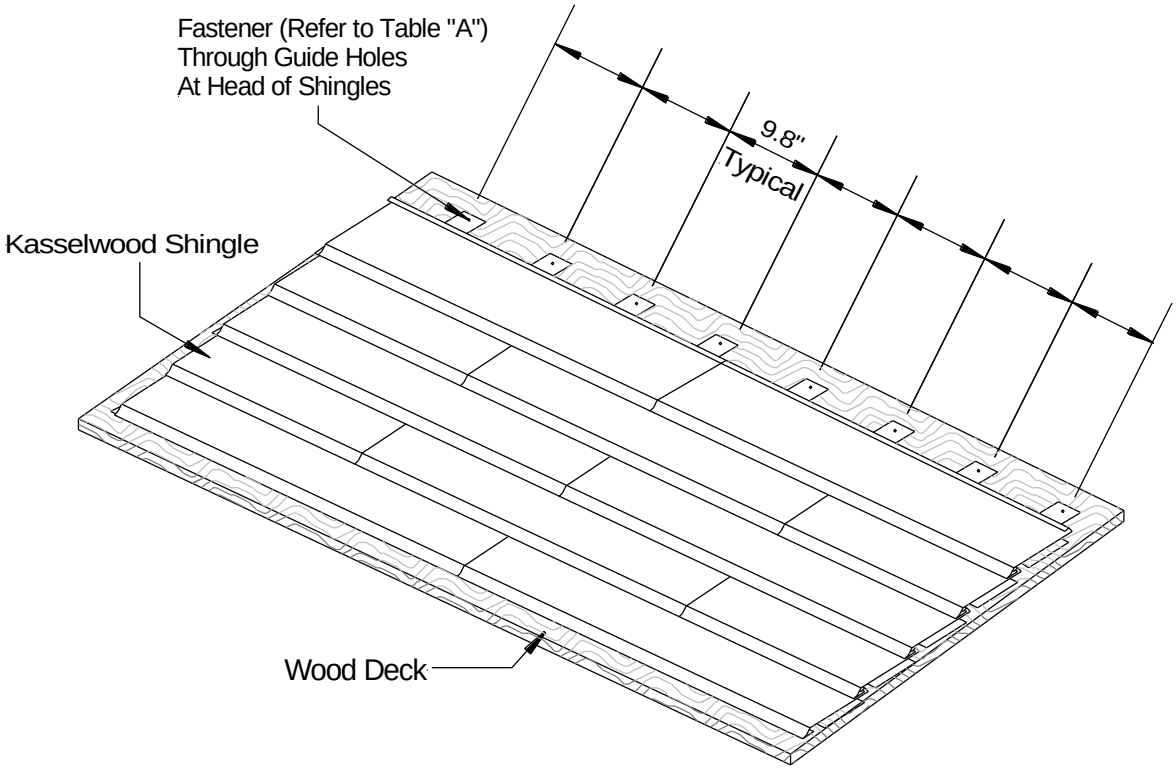

Typical Roof Assembly Isometric View

TABLE "A"			
	METHOD 1:	**METHOD 2:**	**METHOD 3:**
Design Pressure:	**- 74.75 PSF**	**- 127.8 PSF**	**- 161 PSF**
Fastener Spacing Across Shingle width:	9.8"	9.8"	9.8"
Fastener:	Ring Shank Nail (Refer to Pg 4)	Low Profile Screw (Refer to Pg 4)	Lag Screw (Refer to Pg 4)
# Fasteners per Nail Tab:	1	2	1